OPERATORS MANUAL

T-32 MRI LED Monitor

Troyka Med Inc
IOSB Mah. 2284. Cad. No: 48 Yenimahalle Ankara TURKEY
Tel: +90 3122650096- info@troykamed.com – **www.troykamed.com**
MRI LED Monitor Op. Man. Pub. 022018 Pub. No: 0 Rev:0

ISO 13485:2016

Introduction

The MRI LED Monitor is used to present visual stimulus within the MRI environment. It is an add-on to the FMRI Hardware System. The LED monitor uses a standard HDMI signal input, convert it to fiber optic and transfer the optical signal to the LED monitor. So, can be connected to any desired computer.

This User manual covers all important information regarding the operation of the LED monitor.

Our hardware team strongly suggests the full review of this manual prior to operation of the LED monitor to ensure safe operation of the LED in MRI environment.

	Protect from direct sunlight		Protect from rain and humidity	MR	MRI conditional up to 3 Tesla
	Read user manual		Manufacturer	CE	ISO13485 ISO 9001 Class I medical devises

CE The Troyka Med 32'' LED Monitor complies with the EU regulations for active medical devices, Medical Device Directive 93/42/EEC, classified as a medical Device Class I product.

Troyka Med Inc
IOSB Mah. 2284. Cad. No: 48 Yenimahalle Ankara TURKEY
Tel: +90 3122650096- info@troykamed.com – **www.troykamed.com**
MRI LED Monitor Op. Man. Pub. 022018 Pub. No: 0 Rev:0

CE ISO 13485:2016

Contents

1. Safety Information

1.1 General Safety Information and intended use

The LED monitor must only be operated by personnel properly trained in MR Safety.

The intended use for the LED monitor is to present visual stimuli within the MRI environment. It's important that the use of the screen is kept within the MRI environment where the temperature and humidity is kept on a stable level. Any use other than described is not permitted.

The LED monitor must only be operated by personnel properly trained in identifying interference problems such as artifacts, streaks and distortions in image data. It is required that as personnel handling the LED monitor are familiar with the safety instructions given in the manual and other documentation provided to ensure safe operation of the LED monitor and associated equipment.

When connecting the LED monitor to a PC, it must be verified that the PC complies with IEC/UL 60950-1. This will ensure safe operation. Note: must standard PCs sold by established vendors comply with this standard.

1.2 Electrical Safety

	**Warning** Any electromagnetic signal can cause interference on the LED monitor or data collection within the MRI suite. In order to minimize such interference, all ferrous or RF signal emitting devices should be placed far from the scanner, and not come within 200 Gauss (20 mT) of the scanner.
	**Warning** The introduction of electromagnetic equipment (such as is introducing with the Shielded Interface Unit) can cause interference in the function of the MR scanner or in the data collected. It may also affect the function of the LED monitor, other medical electronic equipment and systems within the MR suite.
	**Warning** Contain electric components in the device require several hundred volts to operate properly. In order to prevent potentially lethal electric shock, it is essential to disconnect the device from its power source during installation, and prior to servicing or repair. Some capacitors will remain charged with dangerous voltage levels even after the power is off. In order to prevent any possible electric shock, please wait several minutes for all capacitors to become completely discharged before proceeding. Do not operate the device near the water, where it can become moist, or near excessive heat. Operation under such conditions could result in failure of the LED monitor, possible electric shock, or fire. Don't handle the power cable with wet hands. High voltages present could cause lethal electric shock. If any foreign substances enter the device such as liquid, metal chips or dust, immediately turn off power of the LED monitor. Under no circumstances shall tools or foreign objects being inserted into the device, as this could

	result in failure of the device, electric shock or fire. If smoke, noxious odors or unusual noise should come from the device, immediately turn off power of the LED monitor. If the device is incapable of displaying a picture after it has been turned on, turn it off and do not attempt to operate. Do not damage the power cable of the device. Do not attempt to modify the power cable should it malfunction. Should the power cable become damaged or frayed, it must be replaced. Do not attempt to use an alternative power cable. Use only what was supplied with the LED monitor. If transportation of the LED monitor is necessary, switch off the power, disconnect all power and signal cables and then move it to its new position with care. To disconnect the equipment from the power supply, the power cord must first be removed from the power outlet. Do not attempt to remove the back panel of the LED monitor, as this presents an electric shock hazard. Any and all service should be conducted by qualified service personnel only. Do not operate the LED monitor if any cables are damaged. Switch off and unplug the LED monitor if it is not in use for one day or more. If this equipment is modified, appropriate inspection and testing must be conducted to ensure continued safe use of equipment.
	**Warning** If the MRI LED monitor is modified, appropriate inspection and testing must be conducted to ensure continued safe use of the LED.
	**Warning** To avoid the risk of electric shock, this equipment must only be connected to supply mains with protective earth.

Table 1: Electrical safety signs and descriptions

1.3. Safety Precautions and Maintenance

	**Caution** An eye injury can be caused by the light beam of the fiber transmitter. Never look directly into the optical connectors or fiber optic cables.

	Warning Do not allow liquid near the LED. If liquid accidentally comes in contact with the LED Monitor, turn the equipment off and unplug the mains immediately and take it to the Troyka Med team for assessment and/or repair. Handle the LED monitor very carefully; do not subject it to excessive vibrations or movement of any kind. Do not obstruct or covert the LED monitor with any type of material objects. Clean the equipment only when it is switched off and unplugged. Use only a slightly damp cloth to clean the LED, do not use alcohol or ammonia-based products. Do not place objects on top of the display cabinet or the shielded interface unit, which could fall into vents or which could cover them and prevent proper cooling of the electronics. Do not expose the display to rain or excessive moisture to prevent shock or permanent damage. Contact a service technician if the display does not operate normally when the operating instructions are followed.
	Warning For a small percentage of the population, viewing certain types of video that contain flashing patterns of light may trigger epileptic seizures. The following users are cautioned to consult a physician before using the LED monitor: • children under 5 years, • anyone with a history of epilepsy or a family history of epilepsy, • anyone who has ever experienced epileptic seizures or sensory disturbances triggered by flashing effects.
	Warning Self-heating of cables due to improper cable routing! Injury to equipment and/or operating personnel. • Cables should not be looped crossed.
	Caution The LED system gets hot during operation! Burn hazard • Allow the system to cool down in 5min after the operation, before touching it.

Table 2: Safety precautions and maintenance signs and descriptions

1.4. Product Marking and Labeling

	**Consult Accompanying Documentation** This is a general symbol used to encourage users to get familiar with the accompanying documentation and safety precautions before using the system.
	**MR Safe** An item considered safe for use anywhere inside the magnet room**.** • Fiberoptic Cables • Cable Protection Spiral
	**MR Conditional** An item that has been demonstrated to pose no known hazards in a specified MR environment with specified conditions of use. This marking applies to: • LED Monitor • Shielded Interface Unit (SIU) • 25 Pin Power cable for LED Monitor • 25 Pin LPF • LED Stand See the installation guide for each product for safe operating conditions
	**MR Unsafe** An item that is known to pose hazards in all MR environments and must not be brought into the MR suite. This marketing applies to: • Fiber transmitter • Shielded Interface Unit (SIU) • LPF • Power Cable
	**Power ON** The power on symbol, appearing on one end of a toggle switch indicates that the control places the equipment into a fully powered state.
	**Power OFF** The power off symbol on a toggle switch indicates that using the control will disconnect power to the device.

Table 3: Product marking, labeling and descriptions.

2. General Information

2.1 Inspection of Delivered Goods

Each of LED monitors has been thoroughly tested prior to delivery and is ready for immediate use. Upon receipt, please report any transportation damage or missing accessories immediately. Troyka Med can only accept liability for such damage if it is claimed prior to initial operation. In case of transportation damage, please contact the Troyka Med service department. For faster support please have ready all shipment details, LED monitor serial number and damage description. It is recommended to keep and store the original crate/box used to ship the LED for all future transportation needs.

2.2 Power Connection Information

The LED operates on the line voltages 90-250V AC and 50/60 Hz. It is not necessary to double check line voltages or change any fuses. The equipment should be near the power outlet in the MR suite and the outlet should be easily accessible.

Stabilizing circuits ensures satisfactory performance within supply variations specified. If the supply voltage in your location is not 90-250V AC, please consult your Troyka Med Sales or Service office.

Always use the power supply card supplied in the original shipping carton.

If the enclosed power card could not be used due to a different standard in your country, use a power card that conforms to the following regional standards:

United States (UL)	United Kingdom (BASEC/BS)
Germany (VDE)	Switzerland (SEV)
Canada (CSA)	Japan (MITI)

In other regions, please use an AC power cord that complies with the country's safety regulations.

In order to prevent electrical hazard, the cord set must use a three-core cable of at least 6A/0.75mm^2 and have an earth ground contact on both the free socket and the plug. If the main cord is damaged, use only an original replacement cable.

Warning
The fuse holder for the main fuse is integrated into the power inlet in the shielded interface Unit (SIU). For continued protection against the risk of fire, only replace the fuse with same type, characteristics and voltage rating. Disconnect power before changing the main fuse.

Note: Incorrect cable connections may result in an irregular LED monitor function, damage to the LED monitor quality/components and may shorten the life of the unit.

3. System Overview and Installation Guide

3.1 System Overview

Multipurpose Usage

This brand new, stunning 32” HD MRI LED monitor was designed to provide an optimal MRI compatible monitor that satisfies the needs of both clinical and advanced scientific applications.

Optimal Design

With its slim design, high definition display and superior image quality, the MRI LED Monitor is an optimal choice for an easy to use alternative to conventional projectors or goggle-based image delivery systems İn MRI room.

Flexible Positioning

The low weight and height adjustable mobile foot stand allow easy positioning of the monitor anywhere in the MRI room. According to the customer request the monitor could be delivered with wall mount stand.

Patient Entertainment System

A wireless tablet with the real time media integration playback offers patient amazing experience during the scan. The entertainment software includes over 250 animation, videos and images that patient can choose to watch during the MRI scan. Once patient choose the desired video, the video is transmitted through the wireless communication network to the monitor and the audio signal goes to the MRI sound system for complete patient experience.

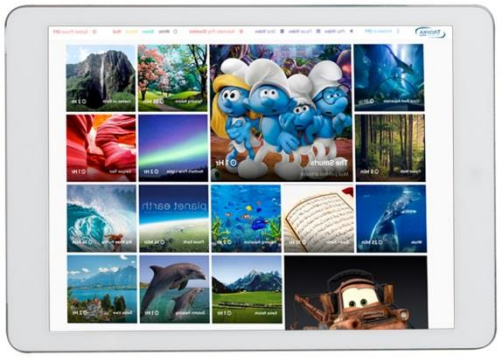

3.2 Installation

3.2.1. Parts Included

1		**MRI-LED Monitor** Presentation of visual stimuli and video materials inside the MR room  To avoid any accidents, the MRI-LED Monitor should be kept no closer than 1.5 Tesla field from the magnet. The legs length will prevent the screen getting closer than 1.5T to a 3T scanner.
2		**Shielded Interface Unit** Shielded enclosure for the Power Supply Unit  The SIU contains ferromagnetic materials and must be kept at the safe distance from the MR scanner (outside the 40mT (400 Gauss) line).
3		**HDMI – Fiber Transmitter** Converts video signal into an optical signal for transmission to MRI room.  Contains ferromagnetic materials, keep out of the Magnet Room
4		**Fiber Cable** The connection between the HDMI – Fiber Transmitter and the LED monitor through an available waveguide.  This cable is fragile Maximum bending radius: 10cm
5		**25 Pin Cable (7m)** Transmit the power from the SIU to LED monitor. This cable Connecting SIU to LPF at the penetration panel in the cabinet room. A similar cable is used to connect LPF inside MRI suite to MRI-LED Monitor.  The 25-pin cable contains ferromagnetic materials and must be kept at the safe distance from the MR scanner (outside the 40mT (400 Gauss) line).

6		**25 Pin Cable (3m)** Transmit the power from the SIU to MRI-Monitor. This cable Connecting SIU to LPF at the penetration panel in the cabinet room. A similar cable is used to connect LPF inside MRI suite to MRI-LED Monitor.  The 25-pin cable contains ferromagnetic materials and must be kept at the safe distance from the MR scanner (outside the 40mT (400 Gauss) line).
7		**25 Pin Low Pass Filter (LPF)** The LPF is mounted to the penetration panel. And filter the power signal between the SIU and LED monitor.
8		**Power Cable** For the SIU. The power cable delivered with your system may vary depending on your type of mains outlet and may come in a dual configuration.  Power cable contains ferromagnetic materials and must be kept at the safe distance from the MR scanner (outside the 40mT (400 Gauss) line).
9	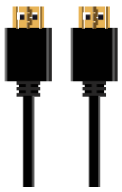	**HDMI Cable** The connection of the Fiber Transmitter with the stimulus presentation PC.  Contains ferromagnetic materials, keep out of the Magnet Room
10		**Cable Protection Spiral**  For use to bound 25 pin power cable and fiber optic cable for cable protection purposes. This item is produced from plastic so considered safe for use anywhere in the magnet room**.**

Table 4: Parts Included and descriptions

The stand consists of the fallowing items:

No:	Photo / Drawing	Qty.	Decription

1		2	2x L shape foot with wheels with brakes
2		1	1 x Lower vertical stabilizer
3	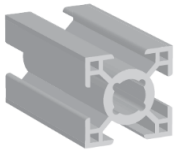	2	2 x Sigma profile for telescopic legs
4		2	2 x Damper for telescopic legs
5		1	1 x Back cover with logo
6		12	M8x16 Allen screw with washer
7		6	M4x16 Allen screw
9		2	Sigma profile top cover
10		1	Allen tool (5mm)

Table 5: List of stand components

3.2.2. LED Monitor Stand Assembly Instruction

	Warning The LED monitor stand should be assembled outside the MR suite. The stand should not be brought inside until the LED monitor screen in attached.

The assembly of the LED monitor stand is delivered in three steps:

Step 1:

-The L shape leg (Table 5-1) is delivered with three M8x16 allen screws with the washers on each.

-Unscrew the screws from the L shaped legs.

-Use the lower stabilizer (Table 5-2) to connect two L shape legs together as shown in Fig. 2. Use the allen given on Table 5 – 10.

Figure 2

Step 2:

-Use two telescopic sigma legs (Table 5-3) and 6 M8x16 allen screws (Table 5-6) to connect legs to the monitor as is described in Fig. 3.

- Use two dampers (Table 5-4) to screw them to the lower end of the sigma profile (Table 5-3) Thinner parts of the dampers should be screwed to the sigma legs.

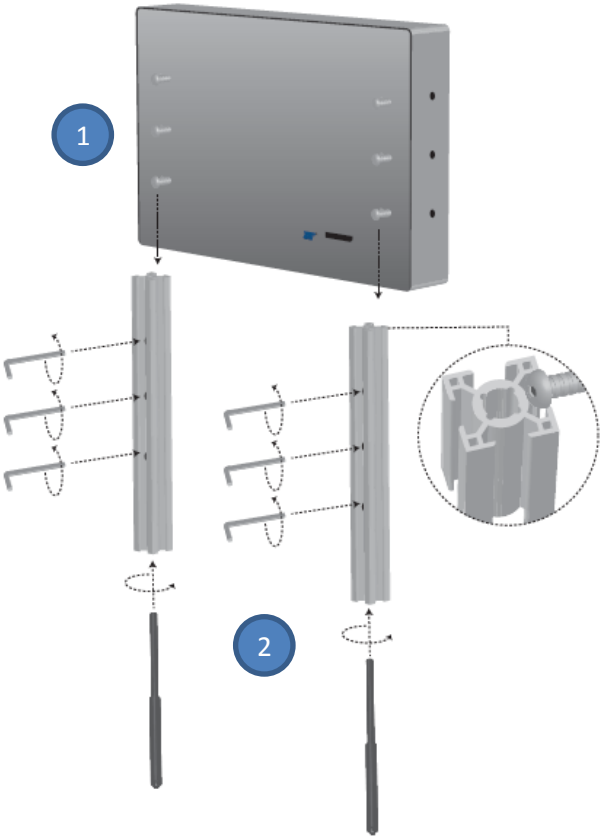

Figure 3

ISO 13485:2016

Step 3:

-Unscrew the tightening wheel on both legs and gently lower the telescopic legs through the L shaped legs. The tightening bolt must be placed through the telescopic legs rail as shown on figure 4.

Adjust the desired height of the monitor and fix the height tightening the tightening wheel on both leg.

Note: Use a water balance tool to adjust the final horizontal position of the monitor.

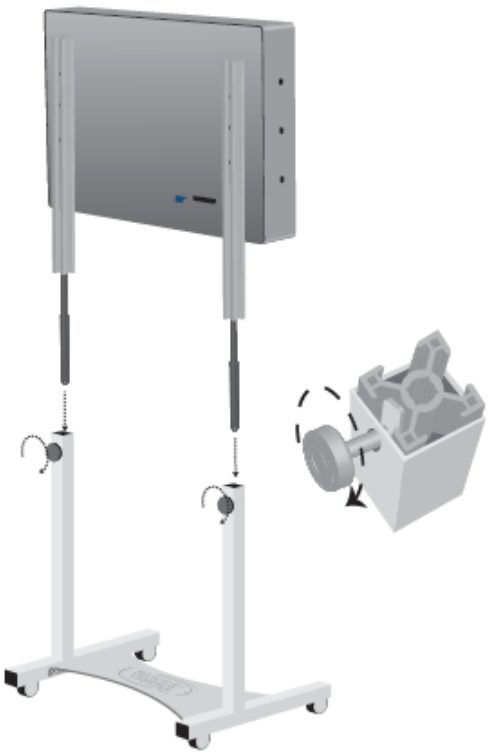

Figure 4

Step 4:

Use back cover shown on Table 5-5.

Slightly unscrew the 6 alien screws holding the tightening element of the back caver.

Insert the tightening element through sigma leg on the both side as is shown on figure 5.

Adjust the desired position of the back cover. (The back caver should be positioned around 4 cm lower than the top end of the sigma legs)

- The MRI-Monitor has the option to adjust the height of LED screen above the floor. To do this, lose the tightening wheel while holding the screen. Gently lower or raise the screen. Tighten the both of the tightening wheels to ensure that it stays in the desired position.

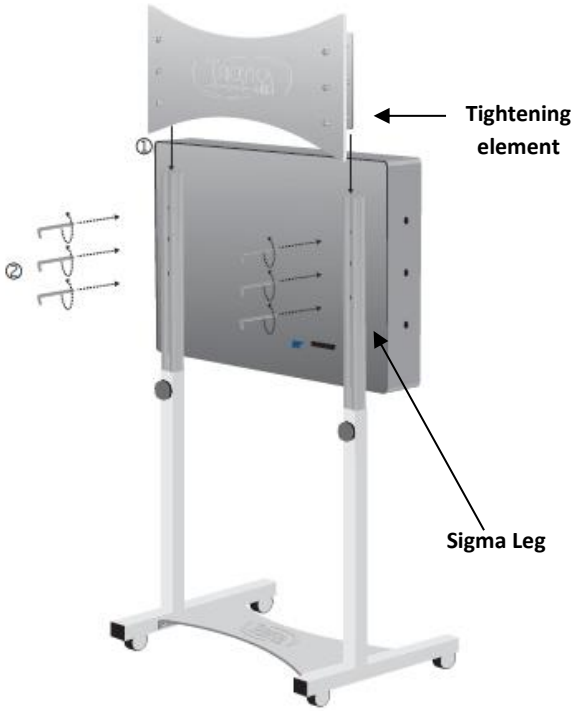

Figure 5

	Warning Crush hazard. Keep hands away from moving telescopic legs, when lowering the LED monitor.
	Warning The LED monitor should be assembled outside the MR suite. Only MR conditional parts should be brought into the MRI suit.

3.2.3. System Installation Instructions

The installation diagram of the MRI LED monitor is given on figure 6. The installation must be done in cabinet room, operator room and magnet room and then the connections must be done according the diagram shown on figure 6.

3.2.3.1Operator Room

Place the HDMI- fiber transmitter next to the PC which will provide the video signal (Figure 6-3).

Connect one end of the HDMI cable (Figure 6-9) to the desired PC-HDMI port and the second end to the fiber transmitter (Figure 6-3).

Connect the 5 V DC adapter to the power inlet and power on the fiberoptik transmitter.

Connect the fiberoptik cable (Figure 6-4) to the fiberoptik transmitter and feed the fiber through any desired waveguide into the MR suite. The wave guide could be located in cabinet room or operation room. If there is a SC-SC fiberoptik connector on the penetration panel, you could use this connector to transmit the fiberoptik signal to magnet room (Figure6-11).

3.2.3.2Cabinet Room

-The desired location for the interface unit (figure 6-2) should be selected. The distance from interface unit to the 25 pin LPF at the penetration panel must be less than 3 m. The interface unit must be near to the AC power outlet.

-Once the final localization for the installation has been selected, wall mount step must be done.

-The interface unit has two wall mount fixtures on the back side. The male part should be take off and fixed to the wall.

-Then the interface unit must be placed through the male wall mount fixture for final localization.

-Use 3m length 25 pin cable (Table4-6) to connect the SIU to the LPF (Figure 6-6).

-Use power cable (Table 4-8) to connect SIU to AC power outlet (Figure 6-8).

Low Pass Filter (LPF) Installation

The LPF installation could be done by three different methods, any of those methods could be chosen.

Method 1

Most of the MRI scanner manufacturers have 25-pin LPF on the penetration panel to be used for external MRI equipment connection. If your MRI scanner penetration panel already has an available 25-pin filter, you can use it.

Method 2

Some MRI scanner manufacturers have a hose for 25 pin LPF installations. In this case, unscrew the cover of the hose and install the filter. The shaft of the filter must be kept in MRI room. The male side of the filter must be connected through the hose from magnet room to cabinet room.

Method 3

This method should be applied in case there is neither no available filter nor available hose for filter installation. In this case:

- Choose most suitable removable plate on the penetration panel.

- Remove the plate from the panel.

- Tightly, close the hole with copper tape so that during your work RF noise don't penetrate through the hole and effect the scanner image quality during your work.

- Contact Troyka Med service team to get exact drawing of filter hose.

- Use any available CNC method to open a hose for the filter.

- Place the filter on the plate as was described in method 2.

- Remove the copper tape prove the penetration panel and install the plate with the filter back.

3.2.3.3 MRI Room

-The LED monitor is normally located at the back of the scanner or at the side of the patient bed. This should be kept in mind when cabling is done (Figure 6-1).

-Connect the 25-pin power cable (Table 3-5) between the LED monitor and the LPF. Start with connecting the LPF end first (Figure 6-5).

-Connect the fiber cable to the fiber SC fiber connector at the back of the LED monitor. The fiber has a double core, one for main use and the second as a spare (Figure 6-4).

Note: The fiberoptik cables have markers on the ends. Make sure that you are connecting the same core to the monitor and fiber transmitter in operation room.

	**Caution** Don't move the LED monitor by dragging or pulling the power cable. This could result in multifunction and damage the system.

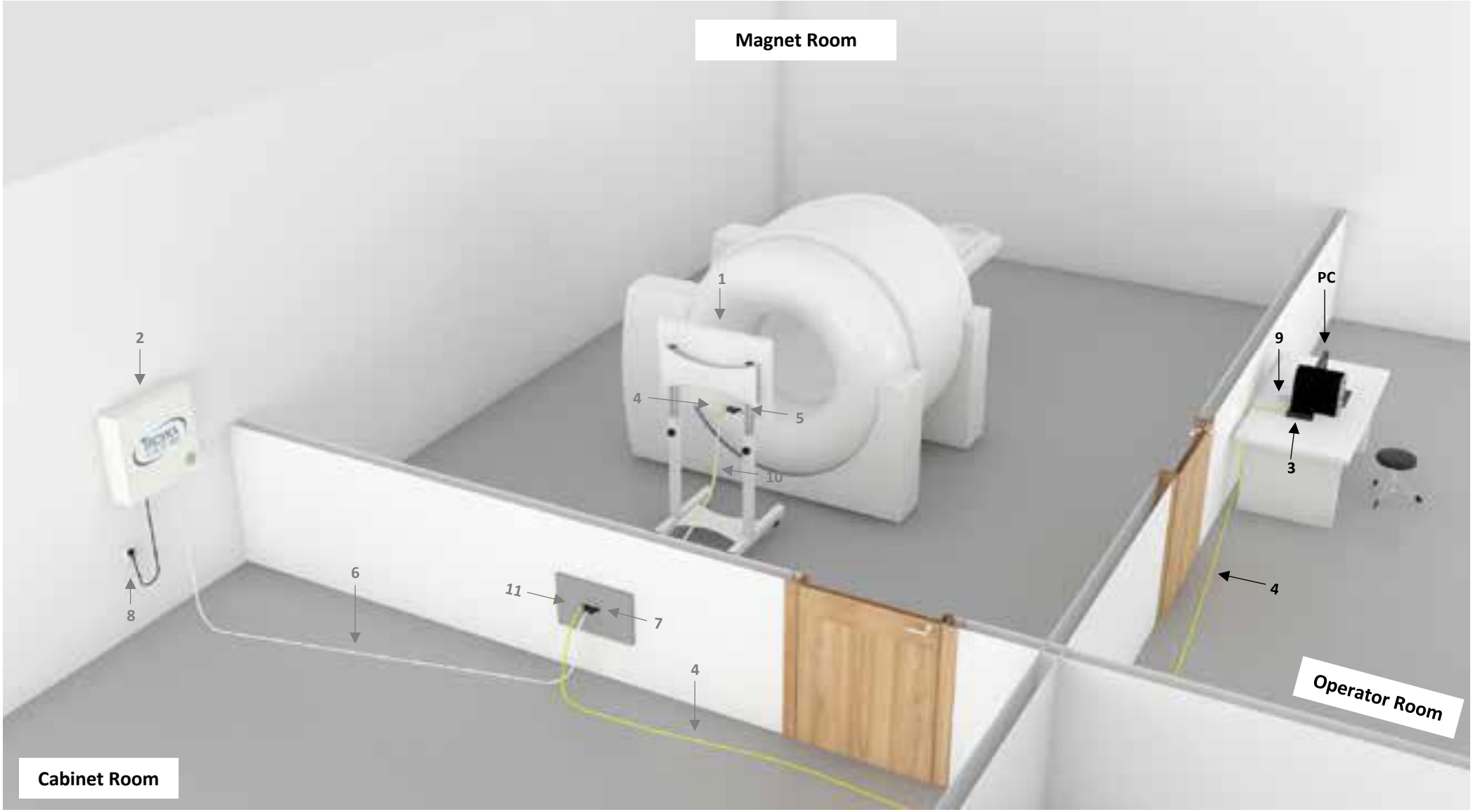

Figure 6: Installation diagram of the MRI LED monitor

4. Maintenance and Disposal

4.1 Cleaning Information

Dust and other matter that collect on the LED may eventually degrade picture quality. Such matter should be removed from the top of the LED with a damp cloth.

	**Warning** Unplug all power connections before cleaning.

4.1.1. Screen Surface

Dampen (do not saturate) a clean, lint-free cloth with environmentally friendly glass cleaner. The cleaner contains spirit as an active substance (up to 98%) and tensides, which can be biologically recycled. Cline the monitor screen using circular motions with the cloth to avoid streams. Remove fingerprints, grease, dirt, and dust. Carefully dry the screen with a second, lint-free cloth.

4.1.2. LED Stand and wires

Use a cloth with disinfectant to clean the stand and wires. Remove fingerprints, dirt, grease and dust. Do not use any oil or grease on the mechanical parts or wheels.

4.1.3. Correct Disposal of the LED

To prevent possible harm to the environment due to uncontrolled waste disposal, please separate this product from other types of waste and recycle it responsibly at the end of its working life.

Users should contact their local government office for details regarding where and how the LED for be safely recycled.

Alternatively, the product can be returned to Troyka Med for appropriate disposal.

5. Technical Specifications

LED Monitor	
Display type	TFT active matrix liquid crystal panel
Screen Diagonal	32"
Active area	698,4 mm(H) x 392.85 mm(V)
Pixels	1920 x 1080
Pixel Arrangement	R, G, B vertical stripe
Display Colors	16,7 M
Surface Luminance	350 c/M2 typ
Contrast Ratio	50000:1 typ
Input Refresh Rate	60 Hz
Display Refresh Rate	120 Hz
Backlight	LED
Response Time	8 ms
Color Gamut	72%
H-Scanning Frequency:	30 ~ 81 kHz
Maximum Pixel Frequency:	148,5 MHz
V-Scanning Frequency:	48 ~ 75 HZ
Optical Input	SC-Connector
Fiber Transmitter	
Input Signal	HDMI
Electrical Connector	HDMI
Optical Connector	SC
Max Data Transfer Rate	1.65Gpbs
Max Data Transfer Distance	20 km
Size	100mm x 65mm x 25mm
Shielded Interface Unit (SIU)	
Voltage Range	90 – 250 VAC
Frequency	50/60 Hz
Fuse	T 3.15A
Power Consumption	~ 120 VA
Size	25 cm x 25cm x 10 cm
Environmental Data	
Storage ambient temperature	-10 to +90 degree Celsius
Operation ambient temperature	0 to +50 degree Celsius
Relative Humidity	%10 to %90
Maximum operation altitude	4000 m above sea level
Panel Surface Temperature	65 °C
Static Magnetic Field	Max. 3 Tesla
Lifetime (MTBF)	30000 hrs
Approvals and legal requirements	
Safety	IEC60601-1, IEC60601-33, ISO 13485, ISO14971
EMC	IEC 60601-1-2

6. Contact

If you have any questions or problems, please contact us through any of the fallowing routs.

If you purchased your system through one of our international distributors, please contact the distributor first especially if the system is under warranty.

In all other cases, please contact info@troykamed.com if you have any questions or to get assistance with technical problems.

For sales related questions, please contact your local distributor, or contact us at sales@troykamed.com

Troyka Med Inc.

IOSB Mah. 2284. Cad. No: 48

Yenimahalle Ankara TURKEY

Tel: +90 312 2650096

E-mail: info@troykamed.com

Website: www.troykamed.com